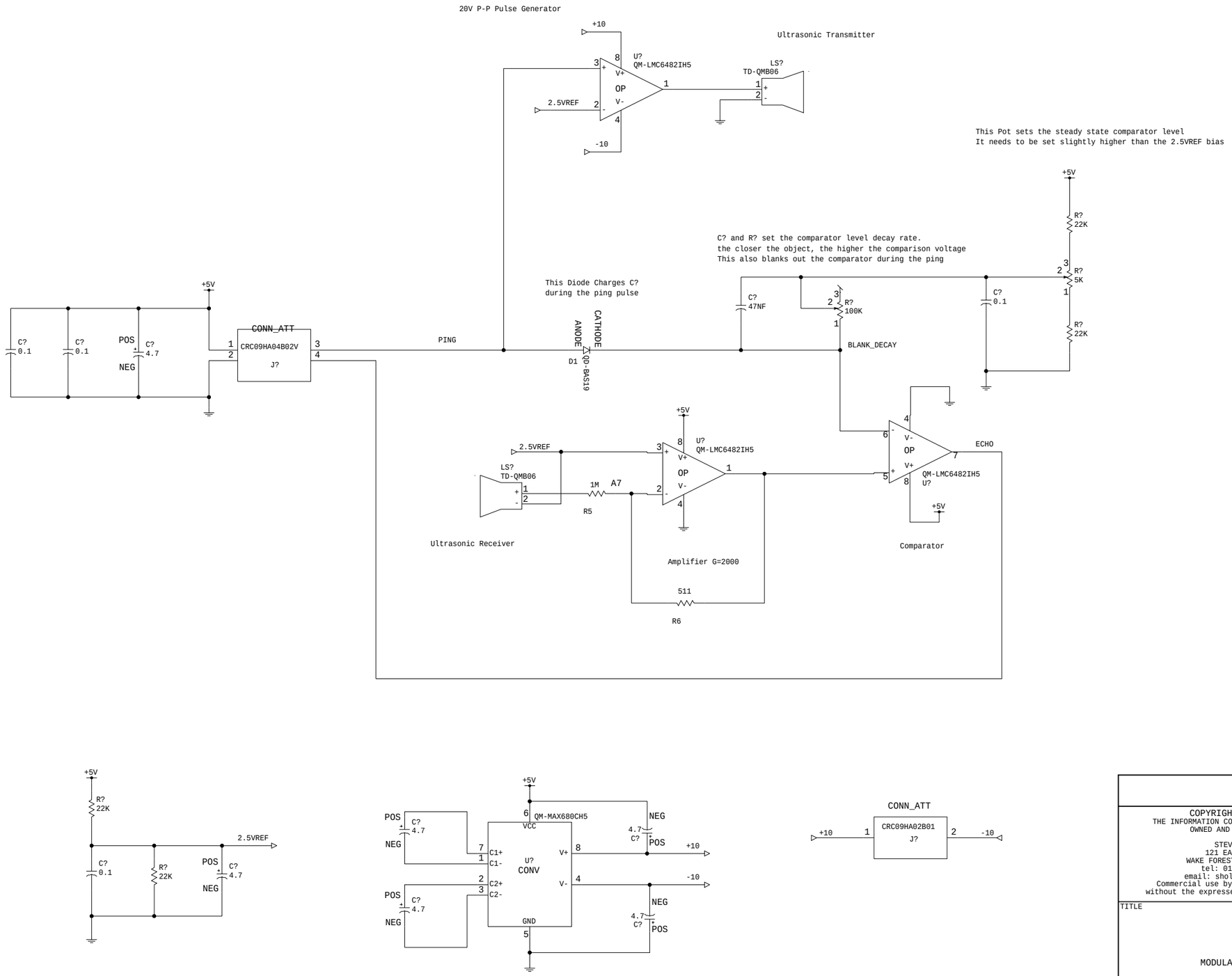

COPYRIGHT INFORMATION
THE INFORMATION CONTAINED IN THIS DOCUMENT IS
OWNED AND COPYRIGHTED BY:

STEVEN HOLMES
121 EAST CEDAR AVE.
WAKE FOREST, NC 27587-2101
tel: 011 1 919 5566591
email: sholmes@mindspring.com

Commercial use by other parties in whole or part
without the expressed written permission is prohibited.

DRAWING NUMBER	SONAR1
DATE	970313
STREAM	00
EC	--
ISSUE	01
APPROVED DSGN	SPH
APPROVED AIP	
TITLE	-- MODULAR ROBOTICS INTELLEGENT ULTRASONIC SONAR
DESIGN	HOLMES
	PROTO
DRAWING NUMBER	SONAR1
AIN'T IT PECULIAR INDUSTRIES	
SIZE	D
SHEETS	1
SHEET	1
STREAM	00

PRINTED IN U.S.A.